D

LAPAR

LPA16 Series

Thin Ball Valve

LAPAR CONTROL VALVE
WWW.LAPAR.COM

LPA16-

Thin Ball Valve

LAPAR
Lapar Control Valve

Code	Actuator	Action	Air Fail Position	Control	Structure	Body	Sealing	Ball	Connection DN	PN
LPA16-	1 Pneumatic	D Double-acting	1 Normally Open	A On-off	5 One-piece	A 316L	P PTFE	A 316L	1 Flange	
	2 Pneumatic & Handwheel	S Single-acting	2 Normally Close	B Control	0 Others	B 316	Q TFM1600	B 316	2 Wafer	
	3 Electric DC24V	0 Others	3 Flexible	C Intelligent		C 304	T EK	C 304		
	4 Electric AC220V		4 Held	0 Others		I 304L	0 Others	I 304L		
	5 Electric AC380V		0 Others			D WCB		0 Others		
	7 Handle					0 Others				
	8 Turbine									
	0 Others									

Design Feature

- Lost-wax precision casting
- Fire safe design approved
- Built-in ISO 5211 direct mounting pad for easy automation
- Anti-static devices for ball-stem-body
- Blow-out proof stem
- TA-LUFT design approved

Parameter

- DN: 15~150mm
- PN: 1.6~4.0Mpa
- 设计标准 Design:
  DIN 3357/1,2,EN 12516-1
- Flanged End:
  DIN EN1092-1 PN10-PN40
- Inspection & Testing:
  DIN 3230/3,EN 12266
- Fire safe:
  API 607 5th 2005,IOS 10497
- Applicable Temperature:
  - PTFE、TFM1600: -29℃ ~ 178℃
  - EK: -29℃ ~ 250℃

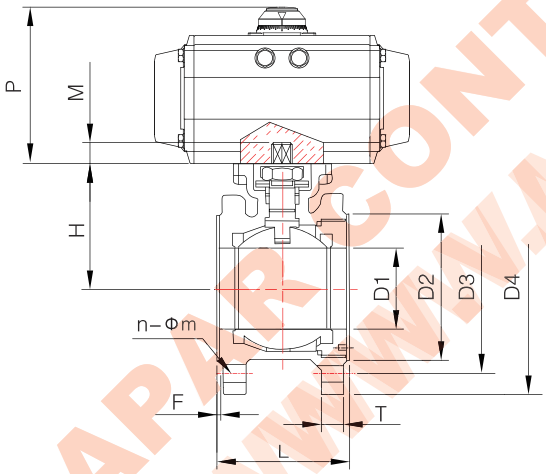

* P: Please refer to the actuator configuration table

ISO5211

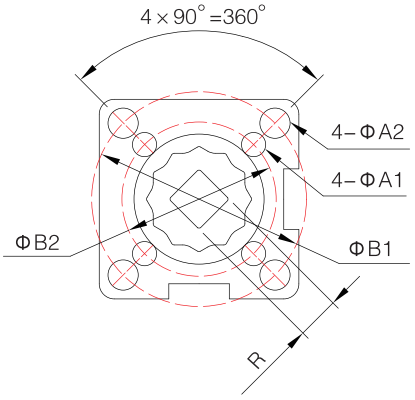

DIN PN16/25/40

Unit:mm

SIZE		PN	L	D1	D2	D3	D4	T	F	n	Φm	H	M	R	A1	A2	B1	B2	ISO5211	LT-DA	LT-SR	LU	LH
DN15	1/2″	16	42	15	45	65	95	9	2	4	12	46	9	9	6	6	36	42	F03-F04	LT 50	LT 50	LU 50	LH 006
DN20	3/4″		44	20	58	75	105	9	2	4	12	51	9	9	6	6	36	42	F03-F04	LT 50	LT 63	LU 50	LH 006
DN25	1″	25	50	25	68	85	115	9	3	4	12	62	11	11	6	7	42	50	F04-F05	LT 50	LT 75	LU 50	LH 006
DN32	1-1/4″		60	32	78	100	140	12	3	4	16	72	11	11	6	7	42	50	F04-F05	LT 63	LT 75	LU 50	LH 006
DN40	1-1/2″	40	65	38	88	110	150	13	3	4	16	78	14	14	7	9	50	70	F05-F07	LT 63	LT 88	LU 160	LH 006
DN50	2″		80	50	102	125	165	20	3	4	16	86	14	14	7	9	50	70	F05-F07	LT 75	LT 100	LU 160	LH 008
DN65	2-1/2″	16 25/40	110 113	63.5	122	145	185	18 22	3	4 8	16	108	17	17	9	11	70	102	F07-F10	LT 88	LT 115	LU 250	LH 010
DN80	3″	16 25/40	120	76	138	160	200	20 24	3	8	16	116	17	17	9	11	70	102	F07-F10	LT 100	LT 125	LU 250	LH 015
DN100	4″	16 25/40	150 154	100	158 162	180 190	220 235	20 24	3	8	16 20	139	22	22	N/A	11	N/A	102	F10	LT 125	LT 145	LU 500	LH 030
DN125	5″	16 25/40	180	125	188	210 220	250 270	22 26	3	8	16 24	176	27	27	N/A	14	N/A	125	F12	LT 145	LT 180	LU 500	LH 050
DN150	6″	16 25/40	225	150	212 218	240 250	285 300	22 28	3	8	20 24	192	27	27	N/A	14	N/A	125	F12	LT 160	LT 200	LU 1000	LH 050

Note: D3 is designed to meet DIN EN1092-1

LAPAR CONTROL VALVE
WWW.LAPARCOM