LPA17–

Ball Sector Valve

LAPAR
Lapar Control Valve

Code	Actuator	Action	Air Fail Position	Control	Structure	Body	Sealing	Ball	Connection DN	PN
LPA17-	1 Pneumatic	D Double-acting	1 Normally Open	A On-off	5 One-piece	A 316L	P PTFE	A 316L	1 Flange	
	2 Pneumatic & Handwheel	S Single-acting	2 Normally Closed	B Control	0 Others	B 316	Q TFM1600	B 316	2 Wafer	
	3 Electric DC24V	0 Others	3 Flexible	C Intelligent		C 304	T EK	C 304		
	4 Electric AC220V		4 Held	0 Others		I 304L	R BODY	I 304L		
	5 Electric AC380V		0 Others			D WCB	S STL	0 Others		
	7 Handle					0 Others	0 Others			
	8 Turbine									
	0 Others									

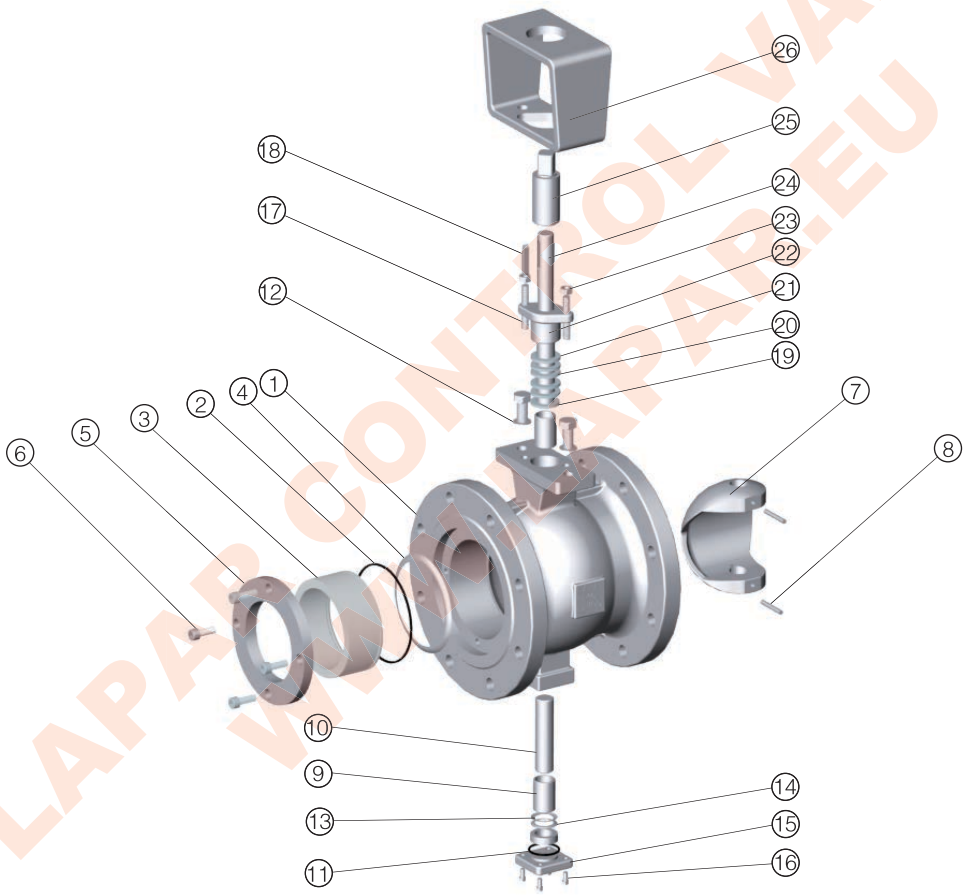

No.	Part	Material	No.	Part	Material
1	Body	CF8, CF8M, CF3, CF3M, WCB	14	Adjusting Gasket	PTFE
2	O–ring	FPM	15	Back Gland	CF8
3	Seat	304+STL	16	Screw	CF8
4	Spring	17–7PH	17	Stud	CF8
5	Seal Seat Cap	CF8	18	Pin	CF8
6	Hexagon Socket Screw	CF8	19	Bottom Packing	PTFE
7	Ball	CF8	20	Mid. Packing	PTFE
8	Pin	CF8	21	Upper Packing	PTFE
9	Self–lubricating stem	CF8–PTFE	22	Packing Gland	CF8
10	Bottom Stem	14–4PH	23	Nut	CF8
11	O–ring	FPM	24	Upper Stem	174PH
12	Gasket	CF8	25	Stem	CF8
13	Ring Gasket	PTFE	26	Yoke	CF8

Design Feature

- Flange Standard:
  GB/9113.1-2000, JB/T 79.1-1994, HG 20592-1997
  ASME B 16.5, EN 1092-1:2001
- Pressure-temperature Rating:
  GB/T 12224-2007 ASME B 16.34-2003 ISO 7005-1
- Test:
  Strength & Density Test : GB/T 4213-2007
  Leakage Class: GB/T 4213-2007 V Class

Body:

- One-piece body design which offers greater rigidity against fluctuating pipe loads.
- Eliminates the leak path associated with two piece body designs.
- Available in Flangeless and Flanged Ends.

Ball Segment

- Carefully designed with characterized V-port to offer rangeability in excess of 300:1, ideal for throttling applications in high consistency pulp services or slurry applications.
- Perfectly ground spherical surface with rounded edges ensure lower operating torques for metal seated valves.
- Hard coated spherical surface prevents galling.
- The segment is carefully designed for optimum flow.
- The seat is supported during higher openings to prevent rocking motion and possible failure of the valve.

Parameter

- DN: 25~400mm
- PN: 1.0~6.4Mpa
- Applicable Temperature:
  - PTFE, TFM1600: -29℃ ~ 178℃
  - EK: -29℃ ~ 250℃
  - BODY, STL: -40℃ ~ 425℃

Equal Percentage Flow Characteristics

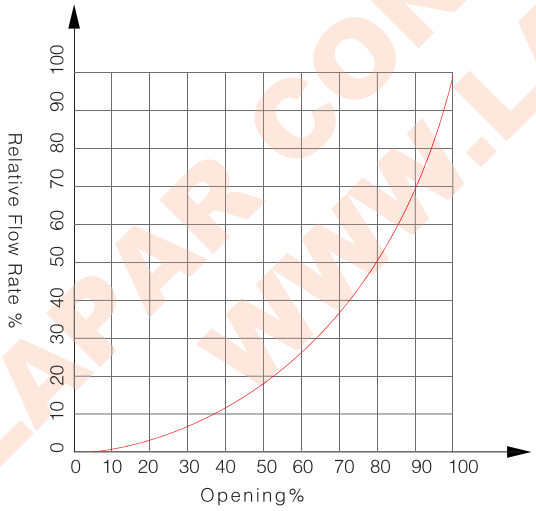

Tolerable Maximum Leakage

DN	Metal Seat	Plastic Seat
25	1.50ml/min	0.15ml/min
32	1.80ml/min	0.18ml/min
40	2.40ml/min	0.24ml/min
50	3.00ml/min	0.30ml/min
65	3.90ml/min	0.39ml/min
80	4.80ml/min	0.48ml/min
100	6.00ml/min	0.60ml/min
125	7.50ml/min	0.75ml/min
150	9.00ml/min	0.90ml/min
200	12.00ml/min	1.20ml/min
250	15.00ml/min	1.50ml/min
300	18.00ml/min	1.80ml/min
350	21.00ml/min	2.10ml/min
400	24.00ml/min	2.40ml/min

CV

DN	Metal Seat	Plastic Seat
25	45	26
32	70	50
40	110	70
50	180	120
65	280	220
80	420	340
100	620	520
125	920	810
150	1320	1100
200	2150	1800
250	3250	2800
300	4680	4100
350	6580	5800
400	8900	7600

Wafer

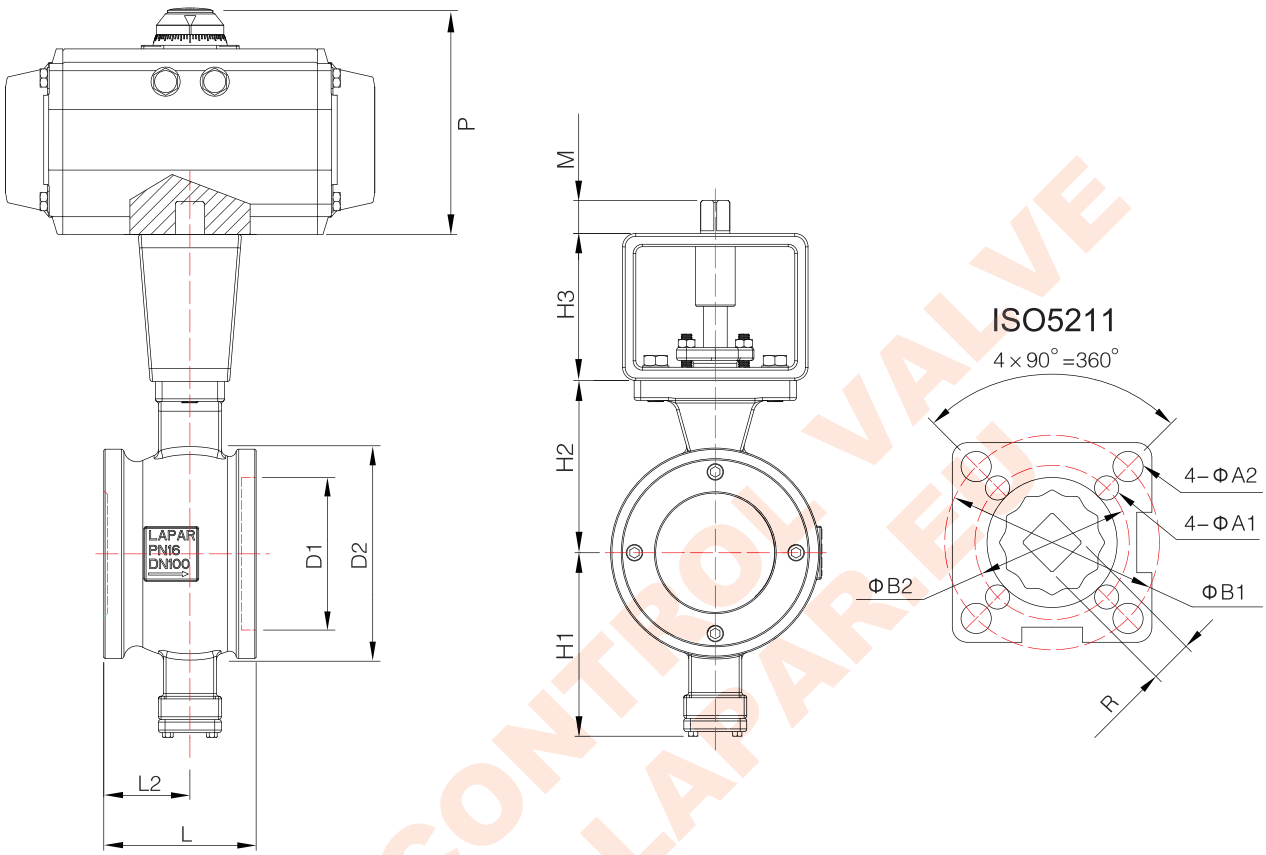

* P：Please refer to the actuator configuration table

Unit:mm

DN	L	L2	D	D1	H1	H2	H3	M	R	A1	A2	B1	B2	IOS5211
25	50	30	38	68	81	73	102	11	11	6	7	42	50	F04–F05
32	60	35	45	76	86	78	100	11	11	6	7	42	50	F04–F05
40	60	35	50	84	90	80	102	14	14	7	9	50	70	F05–07
50	75	43	62	100	93	90	104	14	14	7	9	50	70	F05–07
65	100	50	73	118	108	105	102	17	17	9	11	70	102	F07–F10
80	100	57	90	132	123	118	110	17	17	9	11	70	102	F07–F10
100	115	65	115	158	138	130	108	22	22	–	11	–	102	F10
125	129	78	134	184	148	145	110	27	27	14	–	125	–	F12
150	160	95	164	216	170	170	124	27	27	14	–	125	–	F12
200	200	120	206	268	200	201	124	27	27	14	–	125	–	F12
250	240	148	260	326	240	237	140	–	–	–	–	–	–	–

Flange

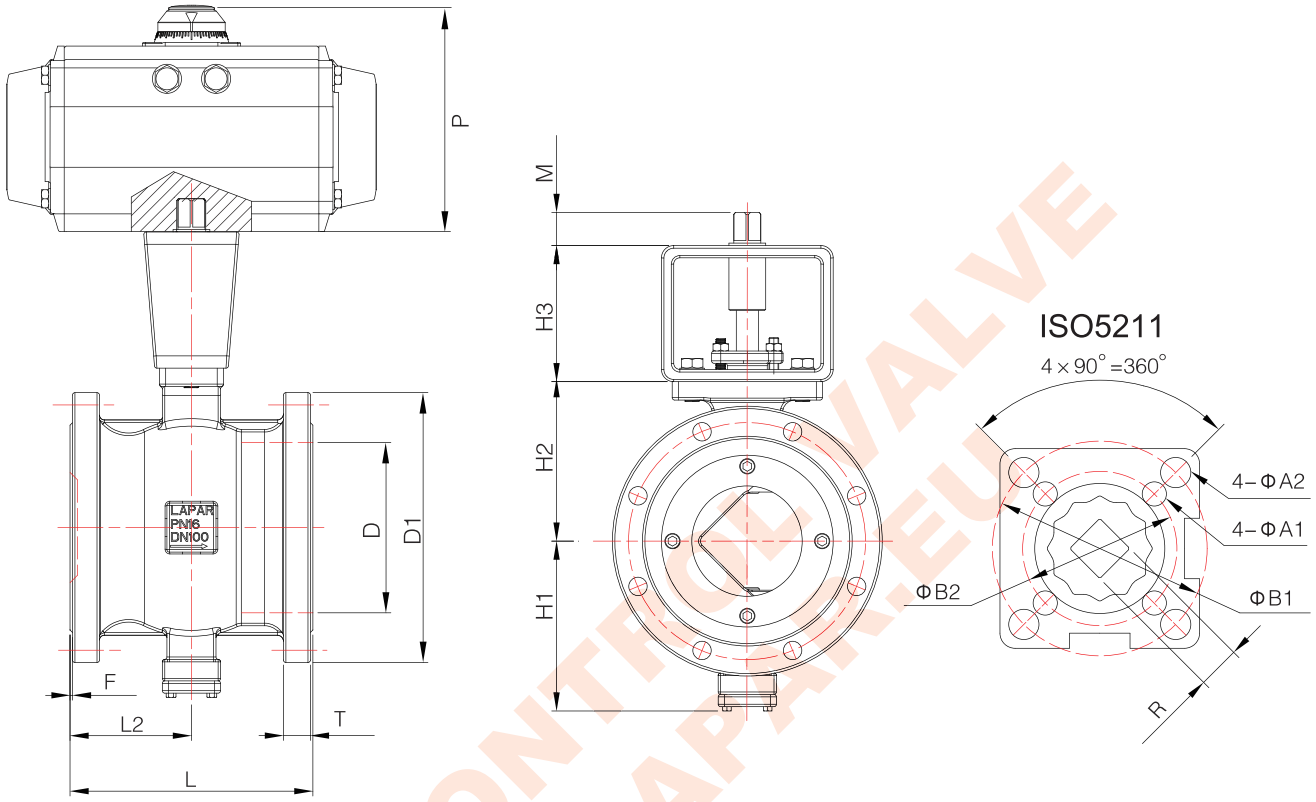

* P：Please refer to the actuator configuration table

PN16

Unlt:mm

DN	L	L2	D	D1	H1	H2	H3	T	F	M	R	A1	A2	B1	B2	IOS5211
25	102	51	38	115	81	73	102	15	2	11	11	6	7	42	50	F04–F05
32	102	51	45	140	86	78	100	18	2	11	11	6	7	42	50	F04–F05
40	114	57	50	150	90	80	102	18	2	14	14	7	9	50	70	F05–07
50	124	60	62	165	93	90	104	20	2	14	14	7	9	50	70	F05–07
65	145	70	73	185	108	105	102	20	2	17	17	9	11	70	102	F07–F10
80	165	75	90	200	123	118	110	20	2	17	17	9	11	70	102	F07–F10
100	194	92	115	220	138	130	108	22	2	22	22	–	11	–	102	F10
125	194	97	134	250	148	145	110	22	2	27	27	14	–	125	–	F12
150	229	110	164	285	170	170	124	24	2	27	27	14	–	125	–	F12
200	243	120	206	340	200	201	124	24	2	27	27	14	–	125	–	F12
250	297	148	260	405	240	237	140	26	2	–	–	–	–	–	–	–
300	338	190	316	460	286	282	140	28	2	–	–	–	–	–	–	–
350	400	221	372	520	330	337	170	30	2	–	–	–	–	–	–	–
400	400	220	420	580	367	372	212	32	2	–	–	–	–	–	–	–

ASME CLASS 150

Unlt:mm

DN	L	L2	D	D1	H1	H2	H3	T	F	M	R	A1	A2	B1	B2	IOS5211
25	102	51	38	115	81	73	102	81	2	11	11	6	7	42	50	F04–F05
32	102	51	45	140	86	78	100	86	2	11	11	6	7	42	50	F04–F05
40	114	57	50	150	90	80	102	90	2	14	14	7	9	50	70	F05–07
50	124	60	62	165	93	90	104	93	2	14	14	7	9	50	70	F05–07
65	145	70	73	185	108	105	102	108	2	17	17	9	11	70	102	F07–F10
80	165	75	90	200	123	118	110	123	2	17	17	9	11	70	102	F07–F10
100	194	92	115	220	138	130	108	138	2	22	22	–	11	–	102	F10
125	194	97	134	250	148	145	110	148	2	27	27	14	–	125	–	F12
150	229	110	164	285	170	170	124	170	2	27	27	14	–	125	–	F12
200	243	120	206	340	200	201	124	200	2	27	27	14	–	125	–	F12
250	297	148	260	405	240	237	140	240	2	–	–	–	–	–	–	–
300	338	190	316	460	286	282	140	286	2	–	–	–	–	–	–	–
350	400	221	372	520	330	337	170	330	2	–	–	–	–	–	–	–
400	400	220	420	580	367	372	212	367	2	–	–	–	–	–	–	–