金属密封球阀 LPA18-□□□□□□□□□□□□
Metal Sealing Ball Valve

LAPAR
Lapar Control Valve

阀类代号 Code	执行机构 Actuator	作用形式 Action	出厂状态 Air Fail Position	控制方式 Control	结构形式 Structure	阀体材质 Body Material	密封材质 Sealing Material	阀芯材质 Ball Material	连接方式 Connection	口径 DN	压力 PN
LPA18-	1 气动 Pneumatic	D 双作用 Double-acting	1 常开 Normally Open	A 开关型 On-off	6 两块式 Two Pieces	A 316L	R BODY	A 316L	1 法兰 Flange	□	■
	2 气动+手轮 Pneumatic & Handwheel	S 单作用 Single-acting	2 常闭 Normally Closed	B 调节型 Control	0 其它 Others	B 316	S STL	B 316			
	3 电动 DC24V Electric	0 其它 Others	3 无固定 Flexible	C 智能型 Intelligent		C 304	0 其它 Others	C 304			
	4 电动 AC220V Electric		4 保位 Held	0 其它 Others		I 304L		I 304L			
	5 电动 AC380V Electric		0 其它 Others			D WCB		0 其它 Others			
	7 手柄 Handle					0 其它 Others					
	8 涡轮 Turbine										
	0 其它 Others										

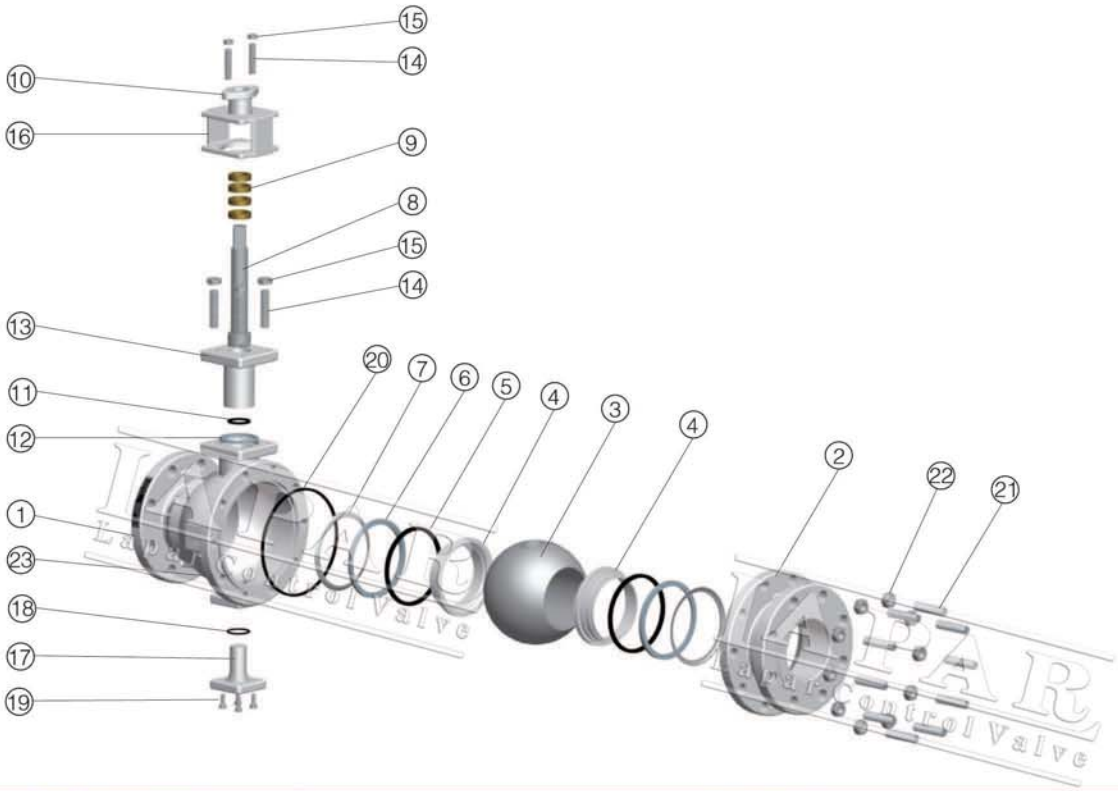

序号/No	零件名称/Part name	材质/Material			
1	阀体 Body	A351-CF8M	A351-CF8	A215WCB	Other Alloy Steels
2	阀盖 Body End	A351-CF8M	A351-CF8	A215WCB	Other Alloy Steels
3	阀球 Ball	A182-F316+Camented Carbide	A182-F304+Camented Carbide		
4	阀座 Seat	A182-F316+Camented Carbide	A182-F304+Camented Carbide		
5	压环 Pressure Ring	A182-F316	A182-F304		
6	阀座密封圈 Seal Ring	GRAFOIL			
7	碟簧 Belleville Spring	INCONEL X-750/SUS631			SUS631
8	阀杆 Stem	ASTM A564 630			
9	阀杆填料 Stem Packing	GRAFOIL/PTFE			
10	填料压盖 Packing Gland	A351-CF8			A216-WCB
11	阀杆护套 Stem Sleeve	A439 D2/50%SS+50 %PTFE			
12	中法兰垫圈 Mid. Flange Gasket	318 SPIRALWOUND+GRAFOIL/PTEE	304 SPIRALWOUND+GRAFOIL/PTEE		
13	中法兰 Mid. Flange	A351-CF8	M A351-CF8		A216-WCB
14	全牙螺栓Fully Threaded Stud	A193-B8			A193-B7
15	六角螺母 Hexagon Nut	A194-8			A194-2H
16	支架 Yoke	ASTM A216-WCB			
17	下端盖 Bottom End Cap	A182-F316	A182-F304		ASTM A105
18	下端盖垫圈 Bottom End Cap Seal Ring	316 SPIRALWOUND+GRAFOIL/PTEE	304 SPIRALWOUND+GRAFOIL/PTEE		
19	内六角螺栓 Hexagon Socket Screw	A193-B8	A193-B7		
20	阀盖垫圈 Body Gasket	316 SPIRALWOUND+GRAFOIL/PTEE	316 SPIRALWOUND+GRAFOIL/PTEE		
21	全牙螺栓 Stud	A193-B8			A193-B7
22	六角螺母 Hexagon Nut	A194-8			A194-2H
23	堵头Drain Plug	SUS316	SUS304		

Note:Red words for fire safe models

设计标准 Design Standard

标准 Standard	美标 ASME	德标 DIN	日标 JIS
压力等级 Pressure Rating	ASME B16.34 CLASS 150 ASME B16.34 CLASS 300	DIN 3357 /EN 12516-1 PN10-PN40	JIS B2001 10K JIS B2001 20K
结构长度 Face to Face	ASME B16.10	PN10-PN16 EN588-1 Series 1&12 PN25-PN40 EN588-1 Series 4&28	B2002 10K Form 6 B2002 20K Form 10
连接端口 Connection Facing	ASME B16.5RF Serrated Finish	DIN 1092-1 PN10-PN40 Facing DIN 2526 Form C	B2212 10k B2214 20K
铸件表面 Casting Surface	MSS SP 55		
检验、测试 Inspection & Testing	API 598	DIN 3203/3,EN12266	JIS B2003
质量认证 Quality Assurance	ISO 9001,QS9000,AD2000-Merkblatt W0,PED 97/23/EC CE0036,API 6D		

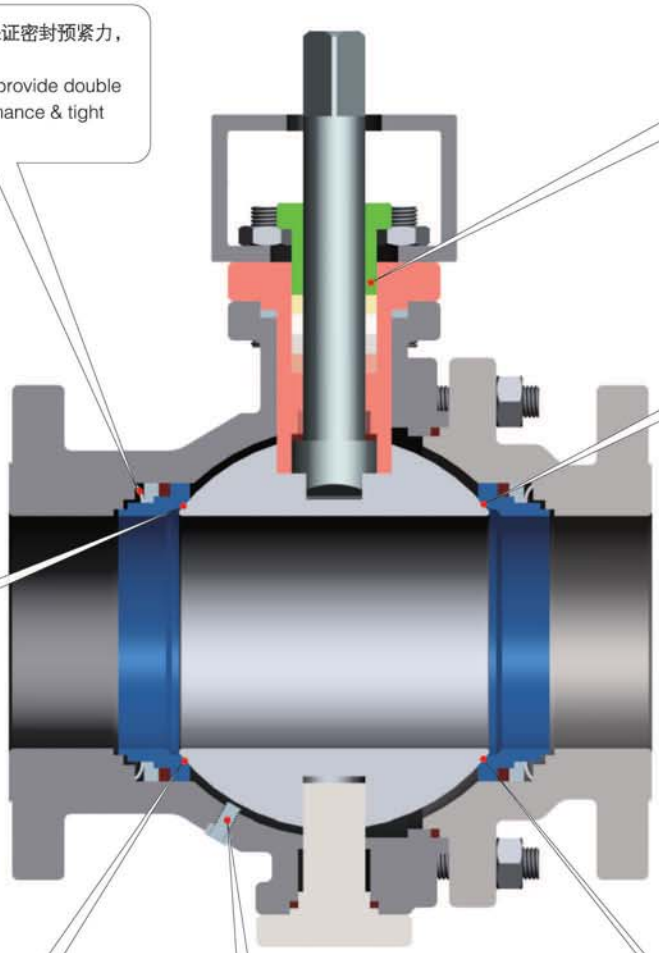

阀座具有弹簧加载的密封结构，保证密封预紧力，并具有双阻断功能
Spring-loaded sealing structure provide double block function & optimum performance & tight shutoff.

弹性加载填料压盖设计，具有自动补偿功能，可有效保证阀杆密封，减少维修工作量。
Gland flange design efficiently supports a tight stem sealing by auto-matic compensation, and reduces maintenance costs.

阀座刮刀设计，具有刮削功能（客户需要时可采用双刮刀---蓝线部分）可有效刮出粘附颗粒。
Cutting design seat enables to remove slurries,muds or solid mediums adhered to ball or seat.

宽大的阀座密封面设计，即使阀座有少量刮伤，也能保证密封，从而延长阀座的使用寿命。
球/座全数控球面磨床磨削，吻合度高，真圆度达到2um。
Seat with broad hard-face offers high performance in sealing,and extends its life.
Ball and Seat Lapped by high precision CNC ensure a firm integration.

钢球流道口处喷涂硬质合金，具有防冲蚀结构设计。
Gemented carbide coating on ball rim provides better performance of anti-corrosion.
Double-scraper design is optional.

具有排污功能(4" 及以上自带，4" 以下可选)。
Drain design for easy cleaning on pipeline.
(available on 4" & greater sizes. Smaller sizes are available upon request)

钢球/阀座采用HVOF喷涂硬质合金技术，图层结合能力强，强度高。
Ball and seat hardened with tungsten carbide,stellite alloy or other alloys for long-wearing.

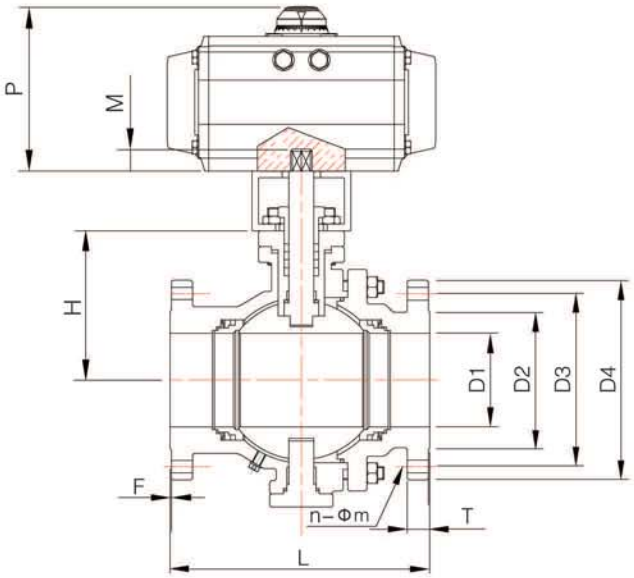

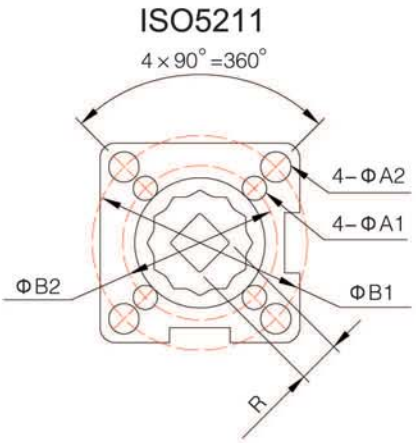

* P：请参考执行器配置表
Please refer to the actuator configuration table

DIN PN 10/16/25/40

Unit:mm

SIZE		PN	L	D1	D2	D3	D4	F	T	N	Φm	H	M	R	A1	A2	B1	B2	ISO5211
DN15	1/2″	10 16 25 40	130	15	45	65	95	2	16	4	14	82	9	9	6	6	36	42	F03-F04
DN20	3/4″		150	20	58	75	105	2	18	4	14	90	9	9	6	6	36	42	F03-F04
DN25	1″		160	25	68	85	115	2	18	4	14	107	11	11	6	7	42	50	F04-F05
DN32	1-1/4″		180	32	78	100	140	2	18	4	14	110	11	11	6	7	42	50	F04-F05
DN40	1-1/2″		200	38	88	110	150	2	18	4	18	130	14	14	7	9	50	70	F05-F07
DN50	2″		230	50	102	125	165	2	20	4	18	132	14	14	7	9	50	70	F05-F07
DN65	2-1/2″	10/16	222	63.5	122	145	185	2	18	8	18	195	17	17	9	11	70	102	F07-F10
		25/40	241						22										
DN80	3″	10/16	241	76	138	160	200	2	20	8	18	202	17	17	9	11	70	102	F07-F10
		25/40	283						24										
DN100	4″	10/16	305	100	158	180	220	2	20	8	18	323	22	22	N/A	11	-	102	F10
		25/40			162	190	235		24		22								
DN125	5″	10/16	356	125	188	210	250	2	22	8	18	351	27	27	14	-	125	-	F12
		25/40	381			220	270		26		26								
DN150	6″	10/16	394	150	212	240	285	2	22	8	22	437	27	27	14	-	125	-	F12
		25/40	403		218	250	300		28		26								
DN200	8″	10	457	200	268	295	340	2	24	8	22	502	27	27	14	-	125	-	F12
		16									22								
		25	502		278	310	360		30	12	28								
		40				320	375		34		30								
DN250	10″	10	533	250	320	350	395	2	26	12	22	505	-	-	-	-	-	-	-
		16				355	405		26		26								
		25	568		335	370	425		32		30								
		40			345	385	450		38		33								
DN300	12″	10	610	300	370	400	445	2	26	12	22	426	-	-	-	-	-	-	-
		16			378	410	460		28		26								
		25	648		395	430	485		34	16	30								
		40			410	450	515		42		33								

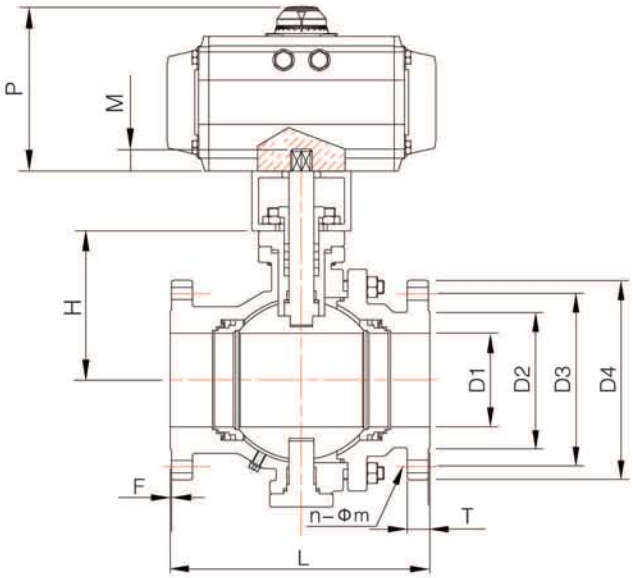

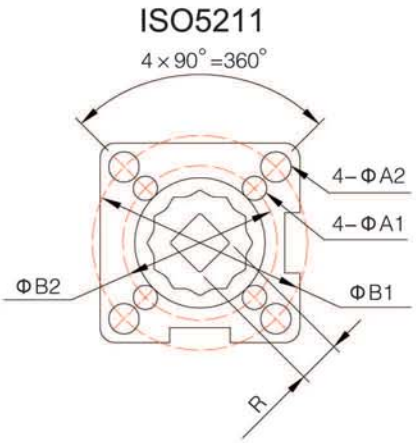

* P：请参考执行器配置表
Please refer to the actuator configuration table

ASME CLASS 150

Unlt:mm

SIZE	L	D1	D2	D3	D4	F	T	N	Φm	H	M	R	A1	A2	B1	B2	IOS5211
1/2″	108	15	34.9	60.3	90	2	8	4	16	82	9	9	6	6	36	42	F03-F04
3/4″	117	20	42.9	69.9	100	2	8.9	4	16	90	9	9	6	6	36	42	F03-F04
1″	127	25	50.8	79.4	110	2	9.6	4	16	107	11	11	6	7	42	50	F04-F05
1-1/4″	140	32	63.5	88.9	117	2	10.7	4	16	110	11	11	6	7	42	50	F04-F05
1-1/2″	165	38	73	98.4	125	2	12.7	4	16	130	14	14	7	9	50	70	F05-F07
2″	178	50	92.1	120.7	150	2	14.3	4	19	132	14	14	7	9	50	70	F05-F07
2-1/2″	190	64	104.8	139.7	180	2	15.9	4	19	195	17	17	9	11	70	102	F07-F10
3″	203	76	127	152.4	190	2	17.5	4	19	202	17	17	9	11	70	102	F07-F10
4″	229	100	157.2	190.5	230	2	22.3	8	19	323	22	22	–	11	–	102	F10
5″	356	125	185.7	215.9	255	2	22.3	8	22.3	351	27	27	14	–	125	–	F12
6″	394	150	215.9	241.3	280	2	23.9	8	22.3	437	27	27	14	–	125	–	F12
8″	457	200	269.9	298.5	345	2	27.0	8	22.3	502	27	27	14	–	125	–	F12
10″	533	250	323.8	362	405	2	28.6	12	25.4	545	–	–	–	–	–	–	–
12″	610	300	381	431.8	485	2	30.2	12	25.4	615	–	–	–	–	–	–	–

ASME CLASS 300

Unlt:mm

SIZE	L	D1	D2	D3	D4	F	T	N	Φm	H	M	R	A1	A2	B1	B2	IOS5211
1/2″	140	15	34.9	66.7	95	2	12.7	4	16	82	9	9	6	6	36	42	F03-F04
3/4″	152	20	42.9	82.6	115	2	14.3	4	19	90	9	9	6	6	36	42	F03-F04
1″	165	25	50.8	88.9	125	2	15.9	4	19	107	11	11	6	7	42	50	F04-F05
1-1/4″	178	32	63.5	98.6	133.4	2	17.1	4	19	110	11	11	6	7	42	50	F04-F05
1-1/2″	190	38	73	114.3	155	2	19.1	4	22.3	130	14	14	7	9	50	70	F05-F07
2″	216	50	92.1	127	165	2	20.7	8	19	132	14	14	7	9	50	70	F05-F07
2-1/2″	241	64	104.8	149.2	190	2	23.9	8	22.3	195	17	17	9	11	70	102	F07-F10
3″	282	76	127	168.3	210	2	27	8	22.3	202	17	17	9	11	70	102	F07-F10
4″	305	100	157.2	200	255	2	28.6	8	22.3	323	22	22	–	11	–	102	F10
5″	381	125	185.7	235	280	2	33.4	8	22.3	351	27	27	14	–	125	–	F12
6″	403	150	215.9	269.9	320	2	35.0	12	22.3	437	27	27	14	–	125	–	F12
8″	502	200	269.9	330.2	380	2	39.7	12	25.4	502	27	27	14	–	125	–	F12
10″	568	250	323.8	387.4	445	2	46.1	16	28.6	545	–	–	–	–	–	–	–
12″	648	300	381	450.8	520	2	49.3	16	31.8	615	–	–	–	–	–	–	–

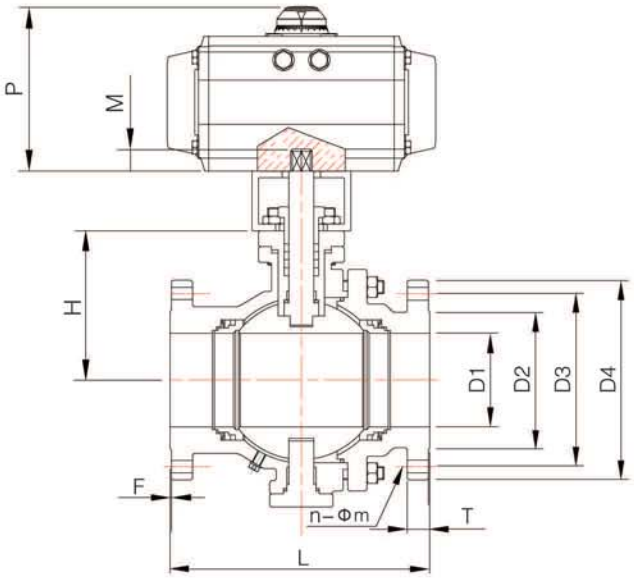

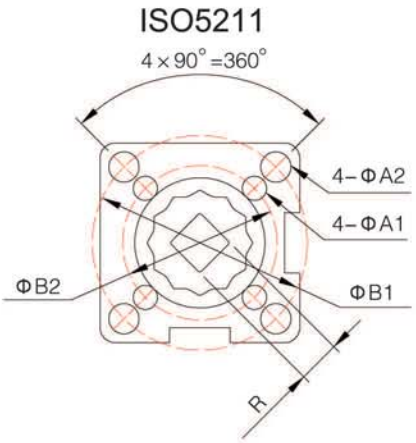

* P：请参考执行器配置表
Please refer to the actuator configuration table

ASME CLASS 600

Unit:mm

SIZE	L	D1	D2	D3	D4	F	T	n	Φm	H	M	R	A1	A2	B1	B2	IOS5211
1/2″	165	15	34.9	66.7	95	7	14.3	4	16	91	9	9	6	6	36	42	F03-F04
3/4″	190	20	42.9	82.6	115	7	15.9	4	19	96	9	9	6	6	36	42	F03-F04
1″	216	25	50.8	88.9	125	7	17.5	4	19	105	11	11	6	7	42	50	F04-F05
1-1/2″	241	38	73	114.3	155	7	22.3	4	22.3	155	11	11	6	7	42	50	F04-F05
2″	292	50	92.1	127	165	7	25.4	8	19	173	14	14	7	9	50	70	F05-F07
2-1/2″	330	65	104.8	149.2	190	7	28.6	8	22.3	195	14	14	7	9	50	70	F05-F07
3″	356	76	127	168.3	210	7	318	8	22.3	220	17	17	9	11	70	102	F07-F10
4″	432	100	157.2	215.9	275	7	38.1	8	25.4	350	17	17	9	11	70	102	F07-F10
6″	559	150	215.9	292.1	355	7	47.7	12	29	461	22	22	–	11	–	102	F10
8″	660	201	269.9	349.2	420	7	55.6	12	32	573	27	27	14	–	125	–	F12

ASME CLASS 900

Unit:mm

SIZE	L			D1	D2	D3	D4	F	T	n	Φm	M	R	A1	A2	B1	B2	IOS5211
	RJ	RF	BW															
1/2″	216	216	216	15	39.68	82.6	20		22.3	4	22.3	9	9	6	6	36	42	F03-F04
3/4″	229	229	229	20	44.45	30	30		25.5	4	22.3	9	9	6	6	36	42	F03-F04
1″	254	254	254	25	50.80	50	50	6.35	28.6	4	25.5	11	11	6	7	42	50	F04-F05
1-1/4″	279	279	279	32	60.30	60	60		28.6	4	25.5	11	11	6	7	42	50	F04-F05
1-1/2″	305	305	305	38	68.27	80	80		31.8	4	28.6	11	14	7	9	50	70	F05-F07
2″	371	368	368	49	92.25	216	216		38.1	8	26.0	14	14	7	9	50	70	F05-F07
2-1/2″	422	419	419	62	107.95	245	245		41.5	8	28.4	14	17	9	11	70	102	F07-F10
3″	384	381	381	74	123.83	240	240		38.1	8	25.4	17	17	9	11	70	102	F07-F10
4″	460	457	457	100	149.23	290	290	7.92	44.5	8	32.0	17	22	–	11	–	102	F10
6″	613	610	610	144	211.14	380	380		55.6	12	32.0	22	27	14	–	125	–	F12
8″	740	737	737	192	269.88	470	470		63.5	12	39.0	27	27	14	–	125	–	F12

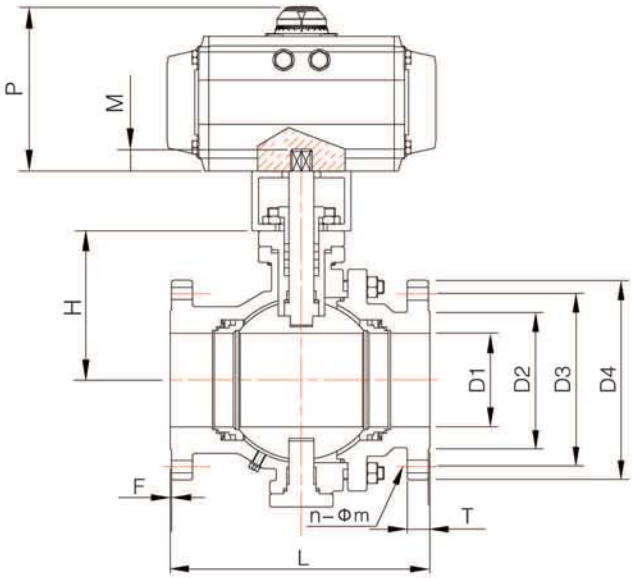

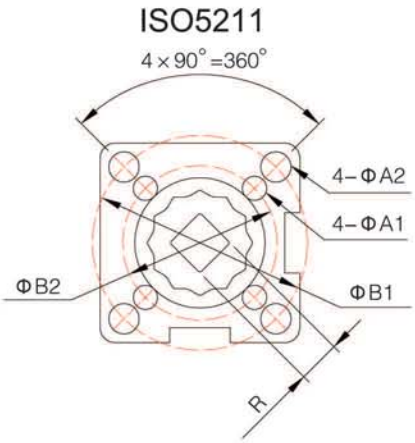

* P：请参考执行器配置表
Please refer to the actuator configuration table

JIS 10K

Unit:mm

SIZE		L	D1	D2	D3	D4	F	T	N	Φm	H	M	R	A1	A2	B1	B2	IOS5211
15A	1/2″	108	15	51	70	95	2	12	4	15	82	9	9	6	6	36	42	F03-F04
20A	3/4″	117	20	56	75	100	2	14	4	15	90	9	9	6	6	36	42	F03-F04
25A	1″	127	25	67	90	125	2	14	4	19	107	11	11	6	7	42	50	F04-F05
32A	1-1/4″	140	32	76	100	135	2	16	4	19	110	11	11	6	7	42	50	F04-F05
40A	1-1/2″	165	38	81	105	140	2	16	4	19	130	14	14	7	9	50	70	F05-F07
50A	2″	178	50	96	120	155	2	16	4	19	132	14	14	7	9	50	70	F05-F07
65A	2-1/2″	190	64	116	140	175	2	18	4	19	195	17	17	9	11	70	102	F07-F10
80A	3″	203	76	126	150	185	2	18	4	19	202	17	17	9	11	70	102	F07-F10
100A	4″	229	100	151	175	210	2	18	8	19	323	22	22	–	11	–	102	F10
125A	5″	356	125	182	210	250	2	20	8	23	351	27	27	14	–	125	–	F12
150A	6″	394	150	212	240	280	2	22	8	23	437	27	27	14	–	125	–	F12
200A	8″	457	200	262	290	330	2	22	8	23	502	27	27	14	–	125	–	F12
250A	10″	533	250	324	355	400	2	24	12	25	545	–	–	–	–	–	–	–
300A	12″	610	300	368	400	445	2	24	12	25	615	–	–	–	–	–	–	–

JIS 20K

Unit:mm

SIZE		L	D1	D2	D3	D4	F	T	N	Φm	H	M	R	A1	A2	B1	B2	IOS5211
15A	1/2″	140	15	51	70	95	2	14	4	15	82	9	9	6	6	36	42	F03-F04
20A	3/4″	152	20	56	75	100	2	16	4	15	90	9	9	6	6	36	42	F03-F04
25A	1″	165	25	67	90	125	2	16	4	19	107	11	11	6	7	42	50	F04-F05
32A	1-1/4″	178	32	76	100	135	2	18	4	19	110	11	11	6	7	42	50	F04-F05
40A	1-1/2″	190	38	81	105	140	2	18	4	19	130	14	14	7	9	50	70	F05-F07
50A	2″	216	50	96	120	155	2	18	8	19	132	14	14	7	9	50	70	F05-F07
65A	2-1/2″	241	64	116	140	175	2	20	8	19	195	17	17	9	11	70	102	F07-F10
80A	3″	283	76	132	160	200	2	22	8	23	202	17	17	9	11	70	102	F07-F10
100A	4″	305	100	160	185	225	2	24	8	23	323	22	22	–	11	–	102	F10
125A	5″	381	125	195	225	270	2	26	8	25	351	27	27	14	–	125	–	F12
150A	6″	403	150	230	260	305	2	28	12	25	437	27	27	14	–	125	–	F12
200A	8″	502	200	275	305	350	2	30	12	25	502	27	27	14	–	125	–	F12
250A	10″	568	250	345	380	430	2	34	12	27	545	–	–	–	–	–	–	–
300A	12″	648	300	395	430	480	2	36	16	27	615	–	–	–	–	–	–	–

钢球、阀座表面硬度 Hardness Value On Ball & Seat Surfaces

钢球表面涂层 Cemented Carbide Coating on Ball	硬度 Hardness	适用温度 Applicable Temperature
镀硬铬 HCr Plating	HRc60~65	-29℃~425℃ (-20.2° F~392° F)
钨铬钴合金 Stellite Weld Overlay	HRc44~47	-46℃~343℃ (-50.8° F~640.4° F)
镍合金 Ni Alloy Overlay	HRc50~60	-29℃~595℃ (-20.2° F~1103° F)
碳化钨 Tungsten Carbide	HRc69~72	-29℃~450℃ (-20.2° F~840° F)
碳化铬 Chrome Carbide	HRc62~68	-29℃~595℃ (-20.2° F~1103° F)

扭矩标准 Torque Values

Size	压差 At Differential Pressure			
	16bar		40bar	
	N.m	In.lb	N.m	In.lb
1/2″	28	248	32	283
3/4″	35	310	40	354
1″	45	398	63	558
1-1/4″	60	531	90	797
1-1/2″	85	752	120	1062
2″	110	974	160	1416
2-1/2″	140	1239	200	1770
3″	180	1593	280	2478
4″	280	2478	550	4868
5″	600	5310	950	8408
6″	778	6885	1250	11063
8″	1310	11594	1900	16815
10″	1918	16974	2868	25382
12″	2648	23435	4315	38188

扭矩备注 Remarks On Torque Values

1、扭力表无安全系数，清洁、非粘性液体乘1.5，固态、泥浆介质乘2.0-3.0。
Safety factors are not built into the above torque values. For clear,non-viscous fluid muliply listed torque by 1.5. For soild,slurry media multiply listed torque by 2.0-3.0.

2、其他应用或影响参数。
Other applications may affect above listed values.

3、阀座材质不同于上表，请咨询我司。
Consult factory torque values for seat materials other than those listed.

4、阀门≥6″不建议采用手柄驱动，建议选用涡轮或其它执行机构。
Handles are not recommented for valves larger than 6″.Gear operators or other actuators are recommended.

5、此表仅供参考，具体应用可能有所不同。
The above torque values are to be used as a guide cnly .Some variation is possible based on application.